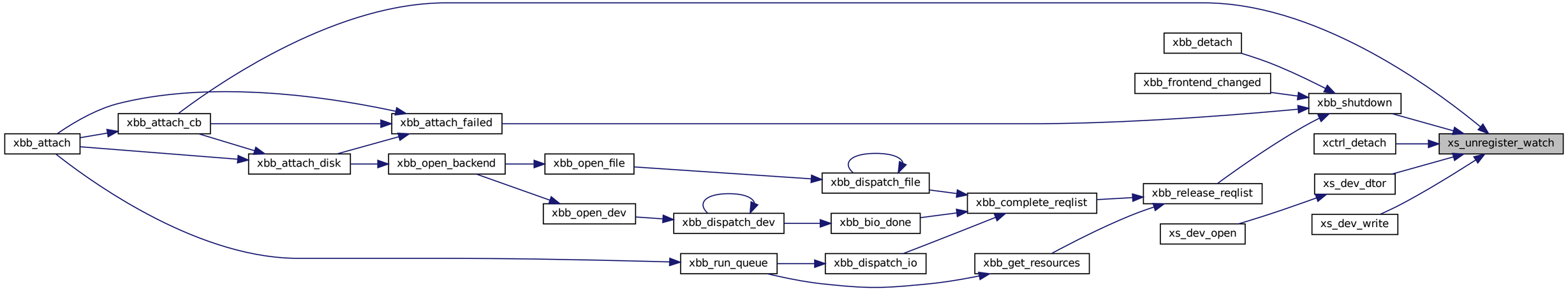
xbb_attach
xbb_attach_cb
xbb_attach_disk
xbb_attach_failed
xbb_open_backend
xbb_open_file
xbb_open_dev
xbb_dispatch_file
xbb_dispatch_dev
xbb_bio_done
xbb_complete_reqlist
xbb_release_reqlist
xbb_run_queue
xbb_dispatch_io
xbb_get_resources
xbb_detach
xbb_frontend_changed
xbb_shutdown
xs_dev_open
xctrl_detach
xs_dev_dtor
xs_dev_write
xs_unregister_watch