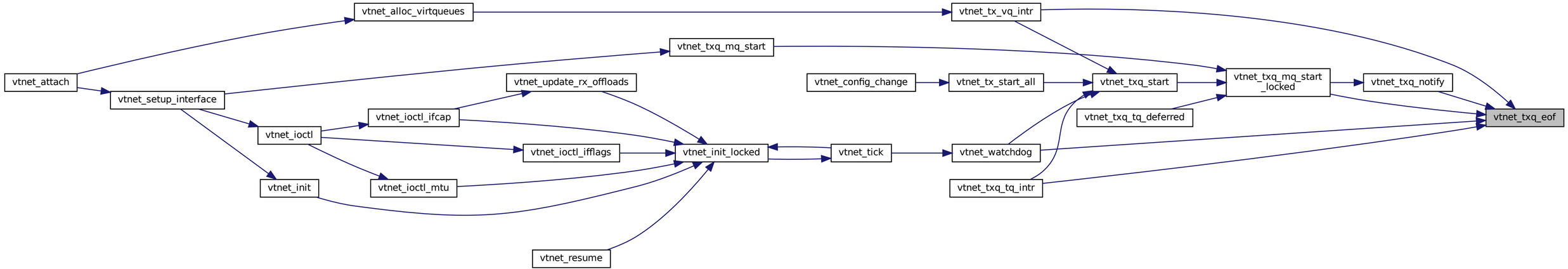
vtnet_alloc_virtqueues
vtnet_tx_vq_intr
vtnet_txq_mq_start
vtnet_attach
vtnet_setup_interface
vtnet_update_rx_offloads
vtnet_config_change
vtnet_tx_start_all
vtnet_txq_start
vtnet_txq_mq_start
_locked
vtnet_txq_notify
vtnet_ioctl_ifcap
vtnet_ioctl
vtnet_txq_tq_deferred
vtnet_txq_eof
vtnet_ioctl_ifflags
vtnet_init_locked
vtnet_tick
vtnet_watchdog
vtnet_init
vtnet_ioctl_mtu
vtnet_txq_tq_intr
vtnet_resume