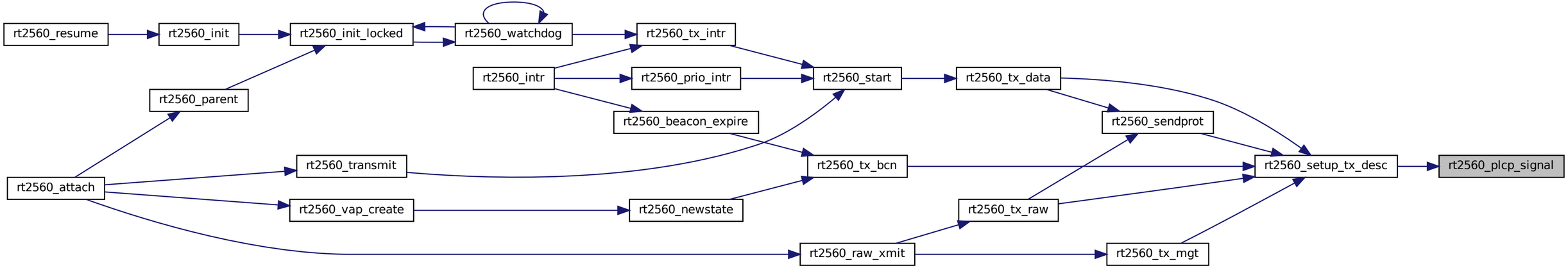
rt2560_resume
rt2560_init
rt2560_init_locked
rt2560_watchdog
rt2560_tx_intr
rt2560_intr
rt2560_prio_intr
rt2560_start
rt2560_tx_data
rt2560_parent
rt2560_beacon_expire
rt2560_sendprot
rt2560_transmit
rt2560_tx_bcn
rt2560_setup_tx_desc
rt2560_plcp_signal
rt2560_attach
rt2560_vap_create
rt2560_newstate
rt2560_tx_raw
rt2560_raw_xmit
rt2560_tx_mgt