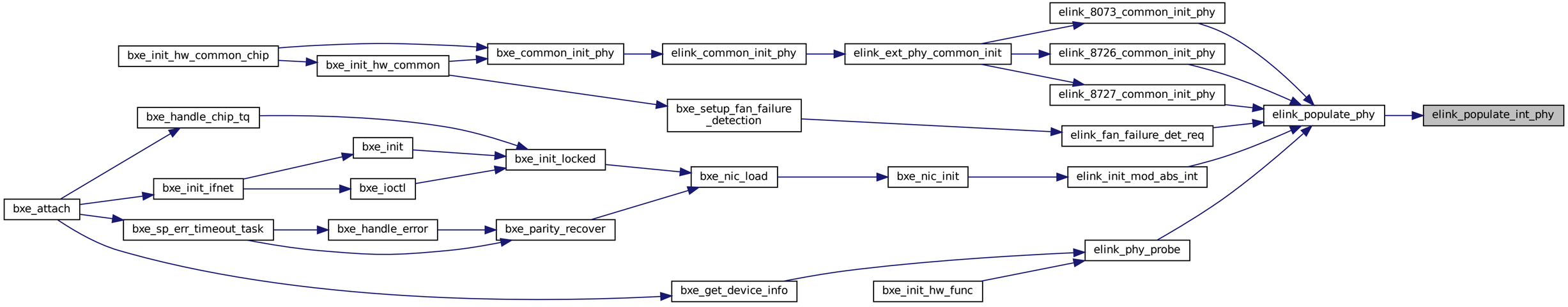
elink_populate_int_phy
elink_populate_phy
elink_8073_common_init_phy
elink_8726_common_init_phy
elink_8727_common_init_phy
elink_fan_failure_det_req
elink_init_mod_abs_int
elink_phy_probe
elink_ext_phy_common_init
elink_common_init_phy
bxe_common_init_phy
bxe_init_hw_common_chip
bxe_init_hw_common
bxe_setup_fan_failure
_detection
bxe_handle_chip_tq
bxe_init
bxe_init_locked
bxe_init_ifnet
bxe_ioctl
bxe_nic_load
bxe_nic_init
bxe_attach
bxe_sp_err_timeout_task
bxe_handle_error
bxe_parity_recover
bxe_get_device_info
bxe_init_hw_func