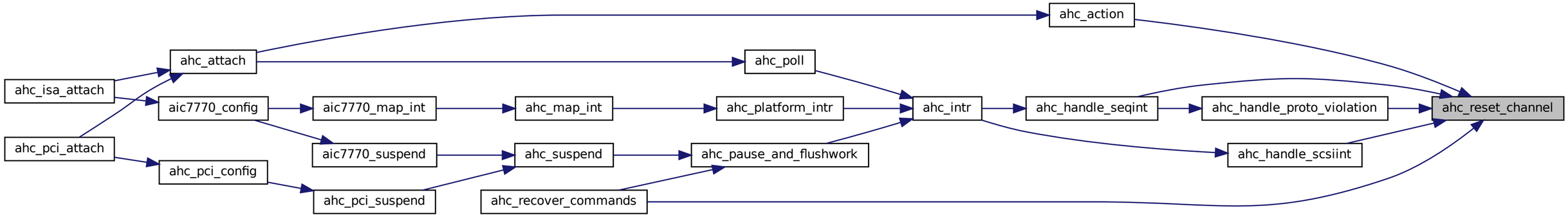
ahc_action
ahc_attach
ahc_poll
ahc_isa_attach
aic7770_config
aic7770_map_int
ahc_map_int
ahc_platform_intr
ahc_intr
ahc_handle_seqint
ahc_handle_proto_violation
ahc_reset_channel
ahc_pci_attach
aic7770_suspend
ahc_suspend
ahc_pause_and_flushwork
ahc_handle_scsiint
ahc_pci_config
ahc_pci_suspend
ahc_recover_commands