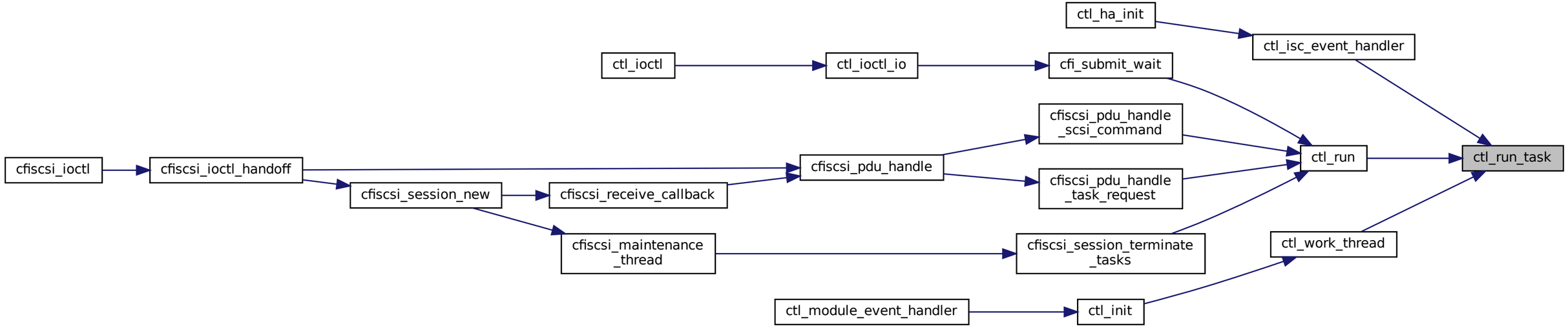
ctl_ha_init
ctl_isc_event_handler
ctl_ioctl
ctl_ioctl_io
cfi_submit_wait
cfiscsi_pdu_handle
_scsi_command
cfiscsi_ioctl
cfiscsi_ioctl_handoff
cfiscsi_pdu_handle
ctl_run
ctl_run_task
cfiscsi_pdu_handle
_task_request
cfiscsi_session_new
cfiscsi_receive_callback
cfiscsi_maintenance
_thread
cfiscsi_session_terminate
_tasks
ctl_work_thread
ctl_module_event_handler
ctl_init