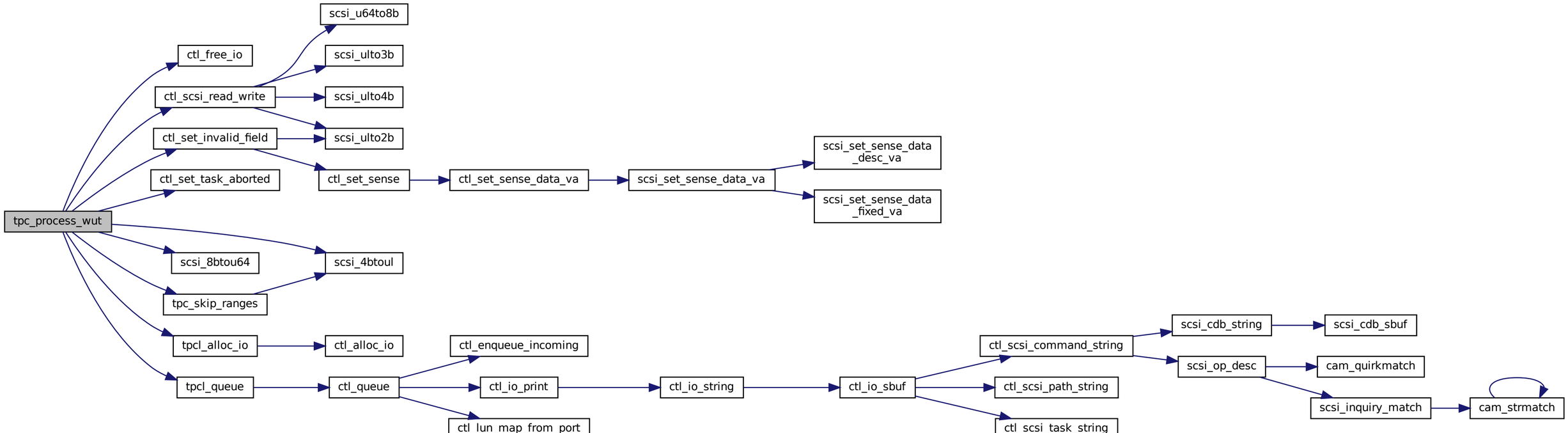
tpc_process_wut
ctl_free_io
ctl_scsi_read_write
ctl_set_invalid_field
ctl_set_task_aborted
scsi_u64to8b
scsi_ulto3b
scsi_ulto4b
scsi_ulto2b
ctl_set_sense
ctl_set_sense_data_va
scsi_set_sense_data_va
scsi_set_sense_data
_desc_va
scsi_set_sense_data
_fixed_va
scsi_8btou64
scsi_4btoul
tpc_skip_ranges
tpcl_alloc_io
ctl_alloc_io
tpcl_queue
ctl_queue
ctl_enqueue_incoming
ctl_io_print
ctl_lun_map_from_port
ctl_io_string
ctl_io_sbuf
ctl_scsi_command_string
ctl_scsi_path_string
ctl_scsi_task_string
scsi_cdb_string
scsi_cdb_sbuf
scsi_op_desc
cam_quirkmatch
scsi_inquiry_match
cam_strmatch